STANDARD SKIMMERS

Aquaventure
Swimming Pool | Spa | Jacuzzi
www.aquaventure.in

Skimmers for Concrete and Liner Pools. Manufactured in white ABS with top round lid and square frame .With weir flap and flow regulation plug. Supplied with extra strong plastic basket.
It has an option of 3 connection sizes viz,1-1/2 internal threaded,2"external threaded and φ50mm for gluing.
Overflow connection φ40mm
Max.recommended flow $5m^3/hr$
For optimum results it is recommedned to use 1 skimmer per $25m^2$ of pool surface area.
The skimmer suction can also be used for suction sweeping the pool.

Inground Skimmers

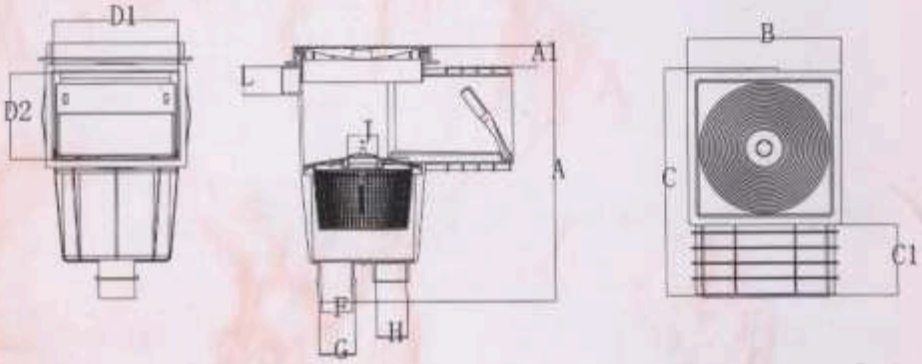

AIS-011

AIS-011-for Concrete Pools

Model	A	A1	B	C	C1	D1	D2	F	G	H	L	J
AIS-011	416.00	34.60	248.90	370.20	156.38	201.7	139.7	1 1/2"	2"	50.00	40.00	49.76

*Size in mm

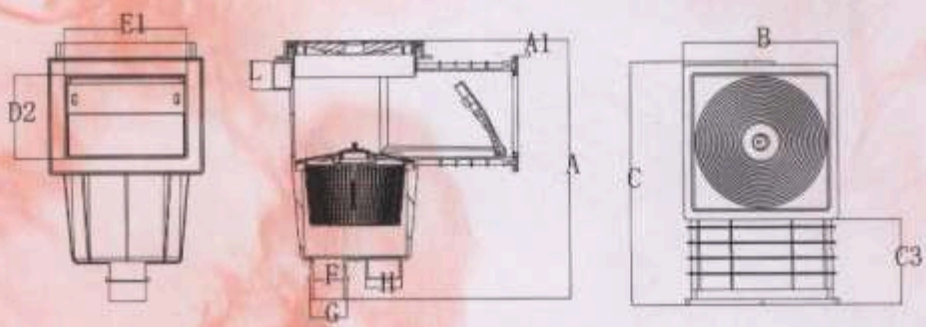

AIS-012

AIS-012-for Liner Pools

Model	A	A1	B	C	C3	D2	E1	F	G	H	L
AIS-012	416	25.31	248.9	400	137	136	196	1 1/2"	2"	2"	46

*Size in mm

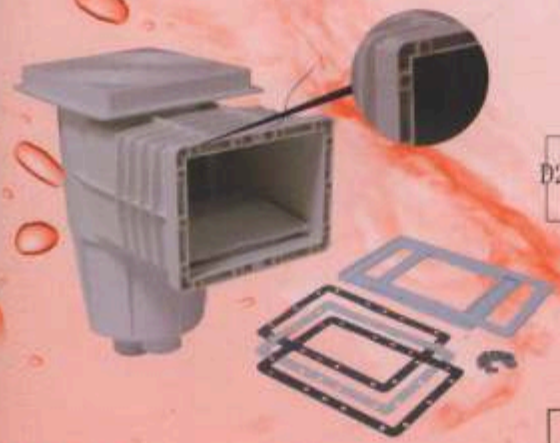

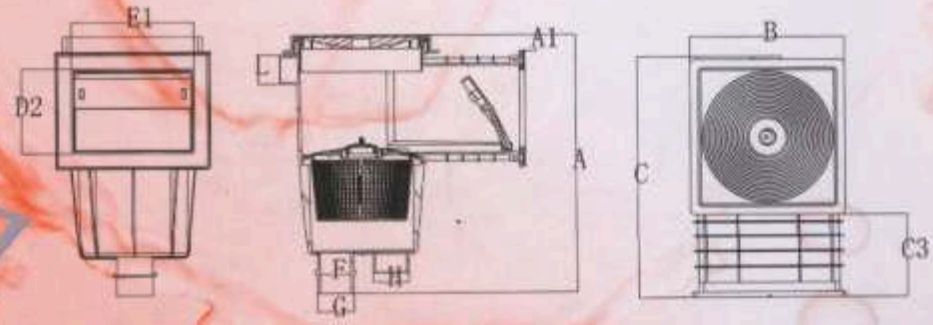

AIS-013

AIS-013-w/Brass Inserts for Liner Pools

Model	A	A1	B	C	C3	D2	E1	F	G	H	L
AIS-013	416	25.31	248.9	400	137	136	196	1 1/2"	2"	2"	46

*Size in mm